Circuit Analysis (Lab # 6)

Experiment 6: VERIFICATION OF KIRCHHOFFS LAWS

Name: Talha Yousaf **Registration No:** 2025-CE-93

Date: 25-April-2026 **Grade and Signature: ……**

CLO2 **CLO3**	Use with identification the circuit components, breadboards, multimeters, power supplies, signal generators, and oscilloscopes. Make measurements in their own constructed electric circuits.			
Psychomotor/Affective	**Level1 (1)**	**Level2 (2-3)**	**Level3 (4-5)**	**Level4 (6-7)**
Report Marks (3)			**Total marks (10)**	

Objective

To verify Kirchhoff's current law and Kirchhoff's voltage law for the given Circuit.

Apparatus Required

Sr. no	Apparatus	Range	Quantity
1	Regulated Power Supply	Standard	1
2	Signal Generator	Standard	1
3	Oscilloscope	Standard	1
4	Digital Multimeter	Standard	1
5	Breadboard & Wires	Standard	As Required
6	Resistors	330ohm, 220ohm 1kohm	3

Description

KCL: The algebraic sum of the currents meeting at a node is equal to zero.

KVL: In any closed path / mesh, the algebraic sum of all the voltages is zero.

Precautions:

1. Voltage control knob should be kept at minimum position.
2. Current control knob of RPS should be kept at maximum position.

Procedure for KCL:

1. Give the connections as per the circuit diagram.
2. Set a value in RPS.
3. Note down the corresponding readings using multimeter
4. Repeat the same for different voltages

Circuit - KCL

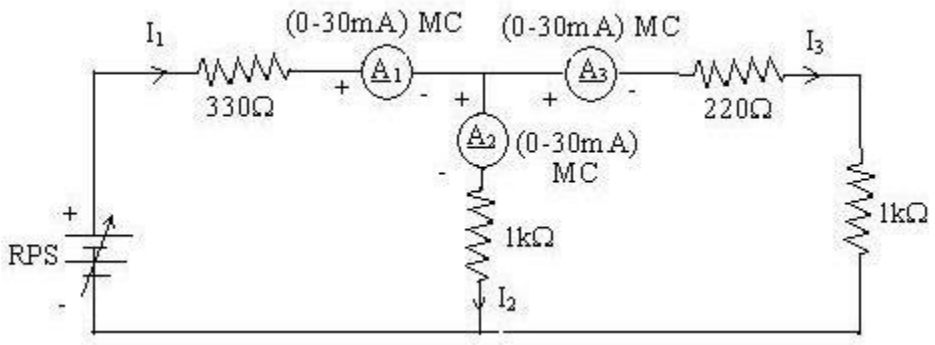

KCL - Practical Values:

Sl. No.	Voltage E	Current			$I_1 = I_2 + I_3$
		I_1	I_2	I_3	
	Volts	mA	mA	mA	mA
1	5	**5.68**	**3.12**	**2.56**	**5.68**
2	15	**17.1**	**9.37**	**7.68**	**17.1**
3	25	**28.4**	**15.6**	**12.8**	**28.4**

Procedure for KVL:

1. Give the connections as per the circuit diagram.
2. Set a value in RPS.
3. Note all the voltage reading
4. Repeat the same for different voltages

Circuit - KVL

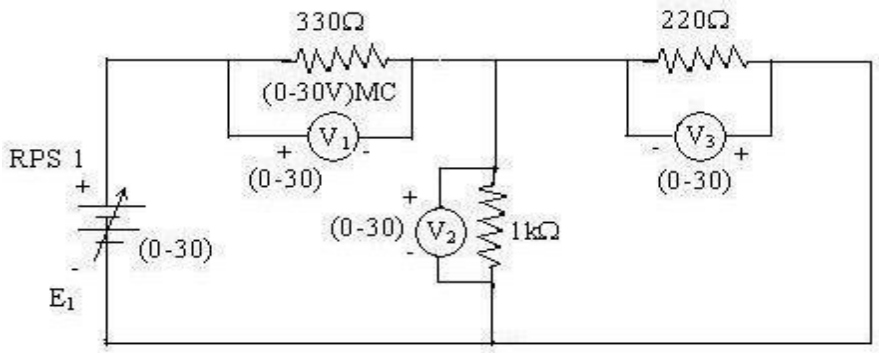

KVL - Practical Values

Sl. No.	RPS	Voltage			$E_1 = V_1 + V_2$
	E_1	V_1	V_2	V_3	
	V	V	V	V	V
1	5	**3.23**	**1.77**	**1.77**	**5**
2	10	**6.47**	**3.53**	**3.53**	**10**
3	15	**9.7**	**5.3**	**5.3**	**15**

Result:

Thus, Kirchhoff's voltage law and Kirchhoff's current law are verified practically by performing this experiment.

Post Lab Questions

1. **Define Kirchhoff's current law.**

Kirchhoff's Current Law states that the total current entering a junction is equal to the total current leaving it.
It is based on the conservation of charge.
No charge is lost at a node in a circuit.

2. **Define Kirchhoff's voltage law.**

Kirchhoff's Voltage Law states that the total voltage around a closed loop is equal to zero.
The sum of all voltage rises equals the sum of voltage drops.
It follows the law of energy conservation.

3. **What are the applications of regulated power supply?**

A regulated power supply is used to provide constant voltage to electronic devices.
It is used in computers, mobile chargers, and lab equipment.
It protects circuits from voltage fluctuations.

4. **What are the limitations of KCL?**

KCL is not accurate at very high frequencies.
It does not consider the effect of electromagnetic fields.
It assumes no energy storage at the junction.